REVISIONS			
NUM.	DATE	DESCRIPTION OF CHANGE	DK'D

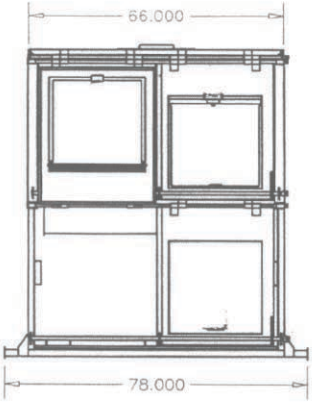

NOTES: UNLESS OTHERWISE SPECIFIED

1. 14 GA HRS BODY PANELS 1" DRAIN HOLE @ BACK [OPTIONAL]
2. 10 GA HRS SKIDS, CASTER PLATES & BRKTS
3. 1" Ø HRS ROUND BAR DUMP HOOK
4. 1-1/2" x 2-1/2" x 14 GA. HRS RECT TUBE TRIM
5. 1-1/4" SCH 40 BLACK PIPE DUMP BAR
6. 1/2" Ø HRS ROUND BAR HINGE-PIN[NOT SHOWN FOR CLARITY]
7. PRE-MOLDED PVC LIDS
8. 14 GA HRS BEAR-PROOF LIDS [OPTIONAL] [NOT SHOWN FOR CLARITY]
9. SWIVEL CASTER [OPTIONAL]
10. POWDER COAT PER CUSTOMER SPECIFICATIONS
11. WEIGHT SPECIFICATION FOR UNIT WITHOUT MOULDED PVC LID, HARDWARE, & BEAR PROOF-LID TOTALS = 795 lbs
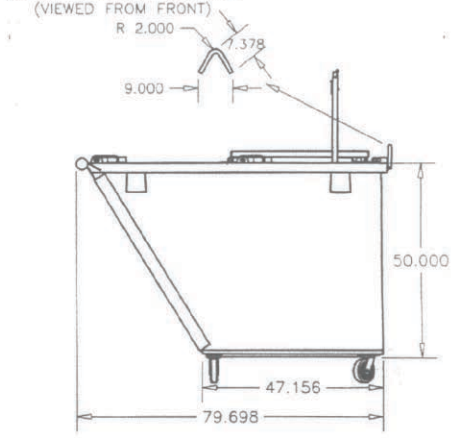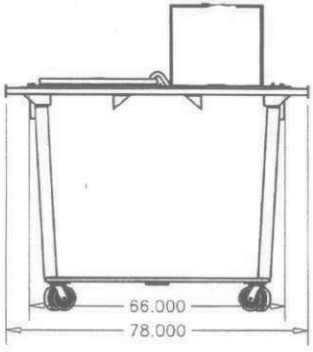
DUMP HOOK DETAIL
(VIEWED FROM FRONT)